Description of standard design and accessories for additional charge

Only for internal purposes of LAC company and LAC business partners

LAC, s.r.o.
+420 547 230 016
info@lac.cz
www.lac.cz

Company's registered office:
Topolová 933, 667 01 Židlochovice
Czech Republic
IČO: 46903470, DIČ: CZ46903470

Production plant Furnaces and Dryers
Topolová 933, 667 01 Židlochovice
Production plant Refractory Castable Shapes
Drnholecká 522, 671 67 Hrušovany nad Jevišovkou

Content

1 GENERAL 4
1.1 Steel plate for furnace floor 4
1.2 Rotary table 4
1.3 Second door 4
1.4 Drive-up ramp 4
1.5 Bottom modification for charging trolley 4
1.6 Combustion gas chamber 5
1.7 Measurement of relative humidity 5
1.8 Window in the door with illumination 5
1.9 Pneumatic door opening 5
1.10 Hydraulic door opening 5
1.11 Furnace mount for drying of charge 5
2 MELTING FURNACES 6
2.1 Protective collar for crucible 6
2.2 Lid options 6
2.2.1 Manual lid - standard 6
2.2.2 Automatic opening lid – accessory for extra charge 7
2.2.3 Automatic split sliding lid 7
2.2.4 Preparation for connection to die-casting machine dispenser – accessory for extra charge 8
2.3 Emergency drain at the bottom of the furnace 8
2.4 Crucible 9
2.5 Crucible breakage control system 9
2.6 Emergency floor drain with cover 9
3 LABORATORY FURNACES 9
3.1 Plate for furnace floor - for laboratory furnaces 9
3.2 Stand for mounting furnace in vertical position 9
3.3 Tube seal from mineral fibre insulation 10
4 COOLING 10
***4.1* Ventilation chimney 10**
4.2 Slider for air supply control 10
4.3 Manually-controlled ventilation flap 10
***4.4* Automatic ventilation flap 10**
***4.5* Manually-controlled suction flap 10**
4.6 Chimney flue with exhaust fan and damper 10
4.7 Exhaust fan - for forced exhaust of waste products 10
4.8 Uncontrolled forced cooling 11
4.9 Controlled forced cooling – can not be combined with semi-gastight design 11
5 MULTI-ZONE HEATING SYSTEM 11
5.1 Three-zone heating system 11
6 PROTECTIVE ATMOSPHERE 12
6.1 Protective atmosphere inlet 12
6.2 Automatically controlled gas inlet 12
6.3 Semi-gastight design of the furnace 12

Only for internal purposes of LAC company and LAC business partners

LAC, s.r.o.
+420 547 230 016
info@lac.cz
www.lac.cz

Company's registered office:
Topolová 933, 667 01 Židlochovice
Czech Republic
IČO: 46903470, DIČ: CZ46903470

Production plant Furnaces and Dryers
Topolová 933, 667 01 Židlochovice
Production plant Refractory Castable Shapes
Drnholecká 522, 671 67 Hrušovany nad Jevišovkou

6.4 Retort for heat treatment in controlled atmosphere 12
6.5 Vacuum pump for PKR, PKR, SRC - for furnace with retort 12
6.6 Overpressure valve for PKR, PKR, SRC - for furnaces with retort 12
6.7 System of monitoring optimal pressure in retort for PKR, PKRC, SRC – for furnaces with retort 12
7 CALIBRATION 13
7.1 Calibration of the controller measuring entry 13
7.2 Calibration of the measuring system 13
***7.3* Optimization of the temperature field to fulfill DIN 17052-01 ΔT 20°C in inner space of the furnace (in empty furnace, at Tmax.) 13**
8 ELECTRO 13
8.1 Wall switchboard 13
8.2 Residual current device 13
8.3 Solid state relay - SSR 13
8.4 Ammeters for checking heating elements' condition 13
8.5 Increase or decrease of power 14
8.6 Connection between furnace and switchboard in hose with protective metal sheath 14
8.7 Heating spirals from Kanthal APM material 14
8.8 Alsint pipes 14
8.9 Graphic temperature recorder 14
8.10 Monitoring of the working cycle monitoring with USB output 14
8.11 Visual indicator of the condition of heating elements 14
8.12 Controllers and their accessories 15
8.12.1 Ht40 P controller 15
8.12.2 INDUSTRY controller 15
8.12.3 Ht40 T controller 15
8.12.4 Limit unit 15
8.12.5 Ht100 multichannel meter 15
8.12.6 Ceramic controller 15
8.13 Thermocouples Chyba! Záložka není definována.
8.13.1 Melting and holding furnaces 15
8.14 Standards RS232 or EIA485 16
8.14.1 Set HtMonit includes interface and software 16
8.14.2 Interface RS232 or EIA485 16
8.14.3 Gas analyzer METREX 16

LAC, s.r.o.
+420 547 230 016
info@lac.cz
www.lac.cz

Company's registered office:
Topolová 933, 667 01 Židlochovice
Czech Republic
IČO: 46903470, DIČ: CZ46903470

Production plant Furnaces and Dryers
Topolová 933, 667 01 Židlochovice
Production plant Refractory Castable Shapes
Drnholecká 522, 671 67 Hrušovany nad Jevišovkou

1 GENERAL

1.1 Steel plate for furnace floor

Metal plate with a protective frame to protect the floor of the furnace from damage caused during manipulation of a heavy charge in the furnace chamber.

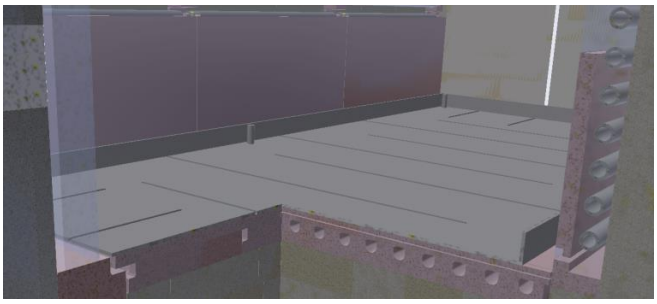
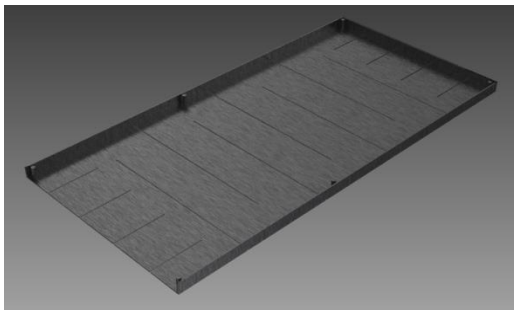

1.2 Rotary table

Hinged rotary table secured to the side of the furnace, used as a workspace for handling the charge in front of the furnace. The table is removable, its height is the same as the height of the furnace sill.

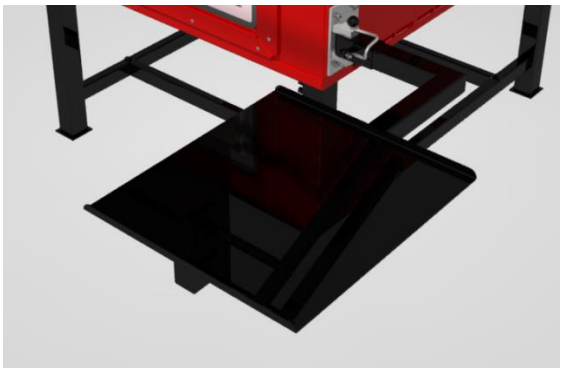
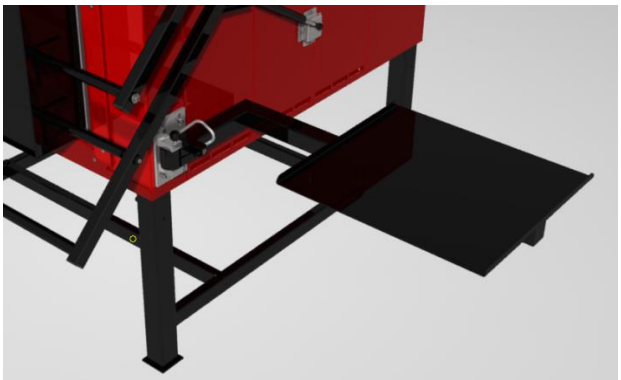

1.3 Second door

It is designed to be used with chamber or bogie-hearth chamber furnaces. The second door is placed on the opposite side from the original door and it enables to insert the charge into the furnace from both sides. The design and finishing of the door is based on the standard production mode for the given type line.

1.4 Drive-up ramp

It enables the trolley to be driven into the inner space of the furnace without the need to adjust the furnace floor. However 100-200mm (the furnace floor insulation) has to be overcome with the trolley which means this solution is only suitable for a light charge.

1.5 Bottom modification for charging trolley

The furnace floor has guiding tracks for the trolley to enter the furnace easily. The height difference the trolley has to overcome is 5-10mm which allows a very heavy charge as well.

Only for internal purposes of LAC company and LAC business partners

LAC, s.r.o.
+420 547 230 016
info@lac.cz
www.lac.cz

Company's registered office:
Topolová 933, 667 01 Židlochovice
Czech Republic
IČO: 46903470, DIČ: CZ46903470

Production plant Furnaces and Dryers
Topolová 933, 667 01 Židlochovice
Production plant Refractory Castable Shapes
Drnholecká 522, 671 67 Hrušovany nad Jevišovkou

1.6 Combustion gas chamber

A combustion chamber placed at the furnace ceiling equipped with a gas heater provides the burning out of solid parts found in the combustion gas leaving the furnace. At its upper part the chamber is equipped with an outlet of combustion gas with a draft diverter. The exhaust piping behind the combustion chamber is not included in the delivery.

1.7 Measurement of relative humidity

The sensor of humidity measurement ingoing into the inner space of the furnace, displaying on the distribution switchboard or on the control panel.

1.8 Window in the door with illumination

An opening covered with glass (2 layers) with the illumination of the inner space.

1.9 Pneumatic door opening

The movement of the door is controlled by a pneumatic drum/pneumatic drums. The door is opened upwards with the exception of small models of PK furnaces whose doors are opened downwards. The door control is provided by touch buttons placed on the distribution switchboard or on the control panel or possibly it may be controlled by a foot pedal.

1.10 Hydraulic door opening

The movement of the door is controlled by a hydraulic drum/hydraulic drums. The door is opened upwards. The door control is provided by a lever placed on a hydraulic aggregate or by touch buttons placed on the distribution switchboard or possibly the door may be controlled by a foot pedal.

1.11 Furnace mount for drying of charge

This steel mount can be easily assembled and secured to the ceiling of the furnace. It is designed to trap the waste heat emitted from the furnace below its removable perforated metal shelves and then to use this heat to pre-dry or heat the charge.

Only for internal purposes of LAC company and LAC business partners

LAC, s.r.o.
+420 547 230 016
info@lac.cz
www.lac.cz

Company's registered office:
Topolová 933, 667 01 Židlochovice
Czech Republic
IČO: 46903470, DIČ: CZ46903470

Production plant Furnaces and Dryers
Topolová 933, 667 01 Židlochovice
Production plant Refractory Castable Shapes
Drnholecká 522, 671 67 Hrušovany nad Jevišovkou

2 MELTING FURNACES

2.1 Protective collar for crucible

Upper cover divided into protective furnace frame and metal or cast iron collar to protect the crucible from mechanical damage.

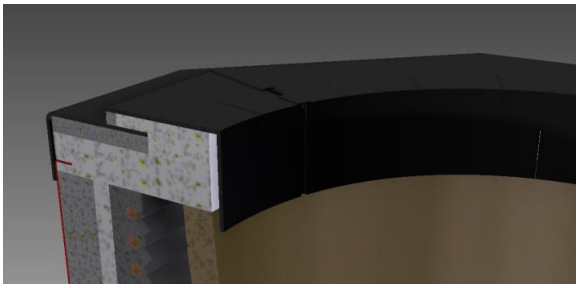

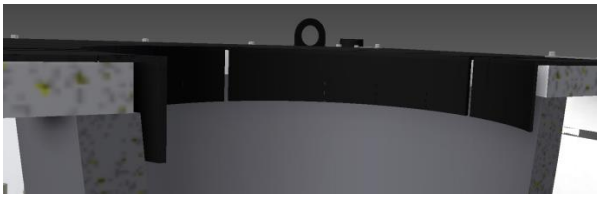

2.2 Lid options

2.2.1 Manual lid - standard

The lid is made of folded structural steel plates and insulated with a layer of micro-porous insulation that is covered by a dust and heat-resistant refractory steel sheet and a refractory steel plate to protect against mechanical damage. Twined sealing rope that is wound around the furnace mouth circumference cushions the lid on the furnace lip. This is a light-weight solution with excellent insulation properties. The lid is set onto a rotating track with dimensions designed to allow maximum functionality with the minimum space requirements. The lid is fitted with a manually-operated lever that allows the operator to lift the lid and then rotate it to expose the furnace mouth where the charge is to be inserted. The lid can be mechanically secured while in the open position.

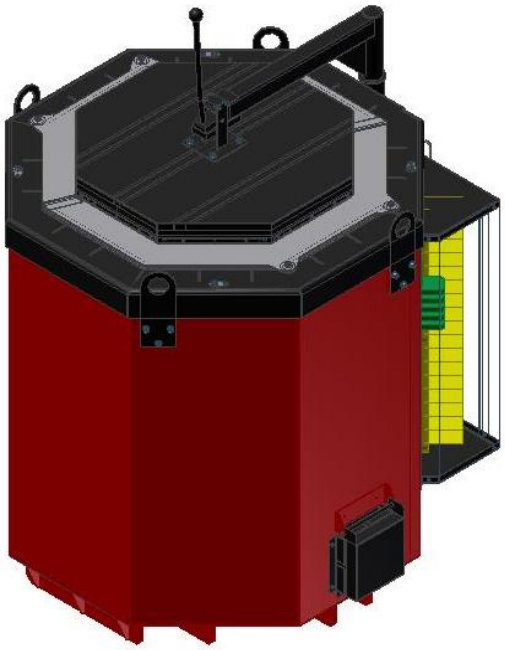



LAC, s.r.o.
+420 547 230 016
info@lac.cz
www.lac.cz

Company's registered office:
Topolová 933, 667 01 Židlochovice
Czech Republic
IČO: 46903470, DIČ: CZ46903470

Production plant Furnaces and Dryers
Topolová 933, 667 01 Židlochovice
Production plant Refractory Castable Shapes
Drnholecká 522, 671 67 Hrušovany nad Jevišovkou

2.2.2 Automatic opening lid – accessory for extra charge

The lid is made of folded structural steel plates and insulated with a layer of micro-porous insulation that is covered by a dust and heat-resistant refractory steel sheet and a refractory steel plate to protect against mechanical damage. Twined sealing rope that is wound around the furnace mouth circumference cushions the lid on the furnace lip. This is a light-weight solution with excellent insulation properties. The lid is set into a rotating track in a bearing housing with a lever mechanism powered by an electric motor with frontal gearbox. The operator controls the lid using a foot pedal and a short push down onto the pedal will operate the lid. Before the lid reaches the end position, its direction can be reversed by another short push down onto the pedal. The mechanism is equipped with a manual emergency opening system for use in case of a power failure. The lid is also equipped with an anti-collision system that will reverse the direction of lid movement in the case of collision of the lid with a solid object (anti-trap).





2.2.3 Automatic split sliding lid

The lid is split, with both halves made of folded structural steel plates and insulated with a layer of micro-porous insulation that is covered by a dust and heat-resistant refractory steel sheet and a refractory steel plate to protect against mechanical damage. Upon closing the lid, each half is sealed to the other with refractory sealing rope. Refractory rope also seals the furnace lip and provides excellent insulation properties. Both halves are set to glide along the furnace shoulders powered by a leveraged toothed gear that is driven by an electro-motor and gearbox. The correct trajectory is further secured by rollers moving along a guided track. In the case of power failure, the lid may be lifted up easily.

LAC, s.r.o.
+420 547 230 016
info@lac.cz
www.lac.cz

Company's registered office:
Topolová 933, 667 01 Židlochovice
Czech Republic
IČO: 46903470, DIČ: CZ46903470

Production plant Furnaces and Dryers
Topolová 933, 667 01 Židlochovice
Production plant Refractory Castable Shapes
Drnholecká 522, 671 67 Hrušovany nad Jevišovkou





2.2.4 Preparation for connection to die-casting machine dispenser – accessory for extra charge

At customer request the lid opening system may be set for connection to a die-casting machine dispenser with communication via I/O interface. (only available for lids with automatic opening and automatic split lid opening systems). It is necessary to adjust the die-casting machine software before making this connection. This task can only be done by a qualified technician. LAC does not take any responsibility for possible malfunction or accidents through use of equipment that has not been set up by a qualified professional.

2.3 Emergency drain at the bottom of the furnace

Emergency drain opening located at the bottom of the furnace to drain melt in case of breakage. Drain opening protected by layer of insulation and aluminum foil to eliminate heat loss.

LAC, s.r.o.
+420 547 230 016
info@lac.cz
www.lac.cz

Company's registered office:
Topolová 933, 667 01 Židlochovice
Czech Republic
IČO: 46903470, DIČ: CZ46903470

Production plant Furnaces and Dryers
Topolová 933, 667 01 Židlochovice
Production plant Refractory Castable Shapes
Drnholecká 522, 671 67 Hrušovany nad Jevišovkou

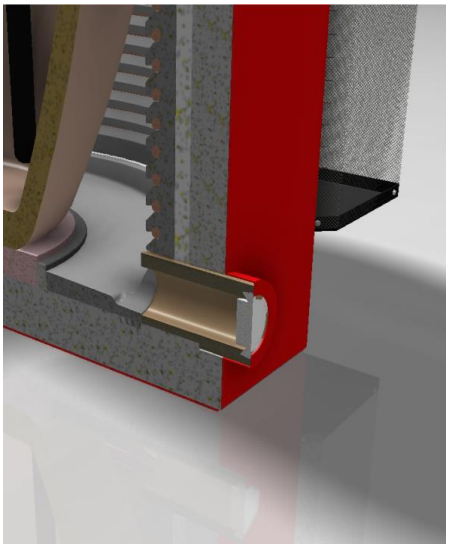

2.4 Crucible

LAC uses Noltina crucibles. Crucibles from other manufacturers can be supplied on request as an atypical solution.

2.5 Crucible breakage control system

In case of an accident the contact sensors at the emergency drain are alerted by the leaking melt and the alarm is immediately activated.

2.6 Emergency floor drain with cover

There is a circular cross-section opening located at the bottom of the furnace. The drain is designed for the removal of the melt in the case of crucible damage or spillage, and is closed by a cover flap insulated by ceramic fiber matting.

3 LABORATORY FURNACES

3.1 Plate for furnace floor - for laboratory furnaces

Furnace floor plate to cover and protect the heating elements or bottom insulation from damage and prevent contact with the charge.

3.2 Stand for mounting furnace in vertical position

Only for LT tube furnaces. The stand allows installation of the furnace into a position where the tube is vertically-oriented.

LAC, s.r.o.
+420 547 230 016
info@lac.cz
www.lac.cz

Company's registered office:
Topolová 933, 667 01 Židlochovice
Czech Republic
IČO: 46903470, DIČ: CZ46903470

Production plant Furnaces and Dryers
Topolová 933, 667 01 Židlochovice
Production plant Refractory Castable Shapes
Drnholecká 522, 671 67 Hrušovany nad Jevišovkou

3.3 Tube seal from mineral fibre insulation

Only for LT furnaces. Fitted seal designed to close off the ends of the tube.

4 COOLING

4.1 Ventilation chimney

Ventilation of the inner furnace space, airflow cannot be controlled. On request, a seal made of insulating materials can be supplied.

4.2 Slider for air supply control

The source of air supply to the inner space of the furnace is located at the bottom part of the door or in the bottom of the furnace. The amount of air suction can be regulated by covering the inlet using a simple mechanism - the slider.

4.3 Manually-controlled ventilation flap

Ventilation; the flap is opened or closed manually.

4.4 Automatic ventilation flap

Ventilation of the furnace inner space, flap opening or closing is controlled by the controller. The INDUSTRY controller is necessary in order to use the automatic ventilation flap.

4.5 Manually-controlled suction flap

It is used in combination with a ventilation flap for fast ventilation of the furnace space.

4.6 Chimney flue with exhaust fan and damper

Stainless steel exhaust chimney with fan to improve the furnace draft. The chimney, combined with the pre-installed draft damper, lowers exhaust temperature and acts as a preparatory first step for handling emission of aggressive exhaust gases. Can be used only in combination with the INDUSTRY controller.

4.7 Exhaust fan - for forced exhaust of waste products

The exhaust fan is connected to the automatic ventilation flap. Emissions of up to approximately 500°C can be emitted directly from the furnace. For higher temperatures it is necessary to reduce the temperature of exhaust air by mixing it with cold air. The exhaust fan can only be used in combination with the INDUSTRY controller. For correct function of the exhaust fan the furnace must be equipped with chimney with sufficient dimension and strength to avoid slowing and blocking the passage of the atmosphere from the furnace. The best solution would be to connect the furnace to the chimney using a draft diverter.

LAC, s.r.o.
+420 547 230 016
info@lac.cz
www.lac.cz

Company's registered office:
Topolová 933, 667 01 Židlochovice
Czech Republic
IČO: 46903470, DIČ: CZ46903470

Production plant Furnaces and Dryers
Topolová 933, 667 01 Židlochovice
Production plant Refractory Castable Shapes
Drnholecká 522, 671 67 Hrušovany nad Jevišovkou

4.8 Uncontrolled forced cooling

Active cooling of the charge. The ventilator blows cold air through the flap on the bottom part of the furnace and it is then blown from the furnace chamber via the automatic ventilating valve.

Fan output and flap-opening operation is controlled by the regulator's event output controller and can be switched on and off, but cooling speed cannot be regulated. For proper cooling function, it is necessary to ensure that the chimney flue has the proper dimension and pull so that reduction or blockage of the flow from the furnace is not affected; ideally by connecting the furnace to a chimney with draft diverter.

4.9 Controlled forced cooling – can not be combined with semi-gastight design

Active cooling of the charge. The ventilator blows cold air through the flap on the bottom part of the furnace and it is then blown from the furnace chamber via the automatic ventilating valve. Fan output and flap-opening operation is controlled by the regulator, and cooling speed is regulated by the controller according to the set cooling speed. Only available in combination with Industry controller. For proper cooling function, is necessary to ensure that the chimney flue has the proper dimension and pull so that reduction or blockage of the flow from the furnace is not affected; ideally by connecting the furnace to a chimney with draft diverter.

5 MULTI-ZONE HEATING SYSTEM

Some furnaces have the technical possibility to have a heating system which is divided into several sections (zones). Each section is then managed separately using its own thermocouple. This solution is designed for furnaces that require very precise temperature distribution.

5.1 Three-zone heating system

The heating system is divided into three parallel branches. This system is intended only for LT type tube furnaces with a minimum pipe length of 750 mm.

LAC, s.r.o.
+420 547 230 016
info@lac.cz
www.lac.cz

Company's registered office:
Topolová 933, 667 01 Židlochovice
Czech Republic
IČO: 46903470, DIČ: CZ46903470

Production plant Furnaces and Dryers
Topolová 933, 667 01 Židlochovice
Production plant Refractory Castable Shapes
Drnholecká 522, 671 67 Hrušovany nad Jevišovkou

6 PROTECTIVE ATMOSPHERE

6.1 Protective atmosphere inlet

Protective atmosphere inlet
Preparation of the furnace for a supply of protective atmosphere into the furnace chamber with hose input on the side of the furnace. In smaller furnaces, eg 550 liters volume, a bottle reducing valve with a flow meter is included.

6.2 Automatically controlled gas inlet

An automatically controlled solenoid valve can also be added to the inlet (in combination with INDUSTRY controller only).

6.3 Semi-gastight design of the furnace

Adjust of the furnace design to ensure the best possible gas- tightness of the furnace workplace. This version does not replace the gas-tight design, the furnace is not suitable for heat treatment under a defined protective atmosphere (e.g. bright annealing). This design is useful for heat treatment with the requirement to suppress oxidation.

6.4 Retort for heat treatment in controlled atmosphere

A closed case from heat-resistant material with an inlet of protective atmosphere. The charge is inserted in the retort before being inserted into the furnace. The retort can be used for preventing oxidation or decarburization of steel parts during the heat treatment.

6.5 Vacuum pump for PKR, PKR, SRC - for furnace with retort

The vacuum pump is used to sucked out air from the retort (cold). This improves conditions for the subsequent flushing of the retort before starting the heating process. This achieves a significant reduction of excess air. The assembly includes the actual pump + solenoid valve + accessories to connect all components. Starting the pump is controlled by the controller.

6.6 Overpressure valve for PKR, PKR, SRC - for furnaces with retort

Overpressure valve is part of the standard equipment of the furnace. Keeps overpressure in the retort 4-6 mbar.

6.7 System of monitoring optimal pressure in retort for PKR, PKRC, SRC – for furnaces with retort

The system is used for automatically regulate the pressure in the retort at its optimal value between 2-4 mbar (200-400 mmHg). The advantage of this system is less consumption of the process gas and keeping a stable pressure of between 2-4 mbar. This is resulting in less deformation of the retort.

.

LAC, s.r.o.
+420 547 230 016
info@lac.cz
www.lac.cz

Company's registered office:
Topolová 933, 667 01 Židlochovice
Czech Republic
IČO: 46903470, DIČ: CZ46903470

Production plant Furnaces and Dryers
Topolová 933, 667 01 Židlochovice
Production plant Refractory Castable Shapes
Drnholecká 522, 671 67 Hrušovany nad Jevišovkou

7 CALIBRATION

7.1 Calibration of the controller measuring entry

Issue of a calibration certificate defining the deviation between the temperature values displayed by the controller.

7.2 Calibration of the measuring system

Issue of a calibration certificate which defines the deviation and the theoretical values entering the controller from the thermocouple and reflecting the deviation of all elements used in the measuring system.

7.3 Optimization of the temperature field to fulfill DIN 17052-01 ΔT 20°C in inner space of the furnace (in empty furnace, at Tmax.)

Adjustment of the internal airflow, or adjustment of the furnace heating system according to the information detected by furnace measuring equipment. These adjustments provide optimization of temperature distribution in the furnace; alternatively the furnace can be fine-tuned for a specific charge.

8 ELECTRO

8.1 Wall switchboard

Power section of the regulation system, including the regulator and the furnace control system, situated in separate wall switchboard.

8.2 Residual current device

Furnace protected by residual current device to disconnect protected electrical circuit in case of power leaks (e.g. damage of insulation or contact with person)

8.3 Solid state relay - SSR

Switch devices which contain no moving parts that can make noise or that can be worn out by frequent switching are used to control furnace operations.

8.4 Ammeters for checking heating elements' condition

Ammeters monitor incoming current to check the status of heating elements. Three ammeters are usually connected (according to the number of connected phases), An ammeter can be connected to each heating element separately for an additional surcharge.

LAC, s.r.o.
+420 547 230 016
info@lac.cz
www.lac.cz

Company's registered office:
Topolová 933, 667 01 Židlochovice
Czech Republic
IČO: 46903470, DIČ: CZ46903470

Production plant Furnaces and Dryers
Topolová 933, 667 01 Židlochovice
Production plant Refractory Castable Shapes
Drnholecká 522, 671 67 Hrušovany nad Jevišovkou

8.5 Increase or decrease of power

Increase or decrease of installed power with regard to customer requirements. It is necessary to consult with company technicians.

8.6 Connection between furnace and switchboard in hose with protective metal sheath

The armored braided metal hose connecting the furnace to the switchboard provides protection from mechanical damage or damage due to possible splashing with hot metal.

8.7 Heating spirals from Kanthal APM material

The use of Kanthal APM material provides longer lifetime of heating elements in comparison with standard production design.

8.8 Alsint pipes

The carriers of heating spirals (pipes) from Alsint material that is resistant to higher temperatures. They are suitable especially for furnaces that are on a long-term basis operating at temperatures over 1200°C.

8.9 Graphic temperature recorder

This device is located in the control panel of the furnace and provides a paper print-out recording of the temperature in the furnace at any given time.

8.10 Monitoring of the working cycle monitoring with USB output

Set of measuring and recording devices for detailed long-term monitoring and data storage with information on the full operating cycle (including length of time the lid is open, temperature logging, etc.). This set provides the option of storing the recorded data onto a USB flash drive and its subsequent processing and evaluation on a PC.

8.11 Visual indicator of the condition of heating elements

This is an electronic system that scans and analyzes the voltage at the control transformer connected to the heating elements (spirals, meanders). If there is indication of voltage, the green light on the control panel (LED diode) will light up indicating the corresponding element. The operator can identify problem areas by assessing which control lights are off and thus identifying which elements are damaged so action can be taken.

LAC, s.r.o.
+420 547 230 016
info@lac.cz
www.lac.cz

Company's registered office:
Topolová 933, 667 01 Židlochovice
Czech Republic
IČO: 46903470, DIČ: CZ46903470

Production plant Furnaces and Dryers
Topolová 933, 667 01 Židlochovice
Production plant Refractory Castable Shapes
Drnholecká 522, 671 67 Hrušovany nad Jevišovkou

8.12 Controllers and their accessories

8.12.1 Ht40 P controller

PID controller controlled by real time clock enables to control the temperature at a constant value, the accuracy of measurement is ±0.1% of the measurement range, the accuracy of regulation is ±1°C. The controller is equipped with a configurable alarm output and an auxiliary output to control an additional function, it is able to save up to 500 records of read values to the internal memory. It may be equipped with a serial communication line RS232 or EIA485.

8.12.2 INDUSTRY controller

PID controller with real-time clock, capacity of up to 30 programs, each program with up to 15 steps, programs can be connected using the JuMP feature. Measuring accuracy ±0,1%, regulation accuracy ±1°C. Controller can be connected to PC with RS232 or EIA485 interface and fitted with two communication lines (allowing MASTER-SLAVE combination).

8.12.3 Ht40 T controller

PID controller with real-time clock; temperature process can be programmed separately for workdays or Saturday and Sunday, parameters can be locked. 1 standard input (temperature processes) and 3 additional outputs (control, signaling, alarm)

8.12.4 Limit unit

The limit unit is designed to protect process equipment against damage from high temperatures, particularly in the event of loop element defects. (Thermocouple, regulator, power switches)

8.12.5 Ht100 multichannel meter

Ht100 meter describes on a display the temperature of the individually measured positions. It is equipped with a serial communication line with the help of which the meter may be connected to a personal computer. Such version is supplied with software which graphically interprets the data being read from the individual positions on a screen of a personal computer (a digital value on the current temperature of the read position and the development in time of the temperature in the individual positions – a graph) and at the same time it archives it to a hard drive. The temperature may be read from up to ten positions.

8.12.6 Ceramic controller

PID controller, designed with a real-time clock, is suitable for the control of ceramic and laboratory furnaces. The maximum capacity is up to 20 programs, each program with up to 15 steps. The regulator contains 1 standard input, 3 additional outputs (control, signaling, alarm) and an inner memory for recorded data.

8.12.7 Melting and holding furnaces

a) Charge thermocouple in protective tube

Thermocouple placed directly in the area of the melt. Accurate measuring of the melt temperature. It is not suitable for applications where thermocouple can be damaged by manipulation with a solid charge or tools.

LAC, s.r.o.
+420 547 230 016
info@lac.cz
www.lac.cz

Company's registered office:
Topolová 933, 667 01 Židlochovice
Czech Republic
IČO: 46903470, DIČ: CZ46903470

Production plant Furnaces and Dryers
Topolová 933, 667 01 Židlochovice
Production plant Refractory Castable Shapes
Drnholecká 522, 671 67 Hrušovany nad Jevišovkou

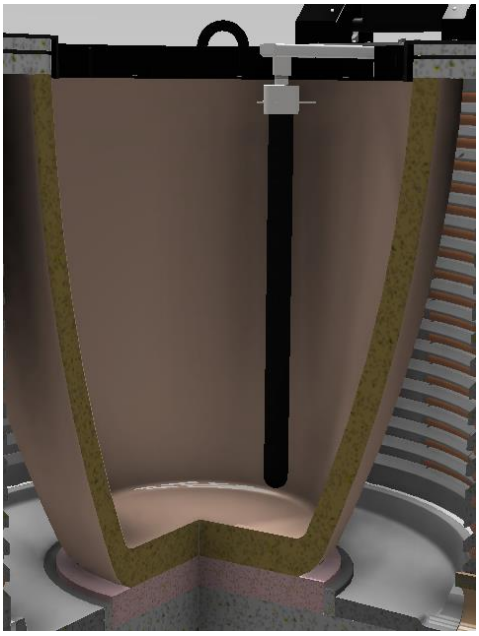

a) Crucible pocket thermocouple

Thermocouple placed in crucible pocket. Measuring with accuracy within a few degrees, no damage possibility during manipulation with the charge. Suitable for holding and melting furnaces.

8.13 Standards RS232 or EIA485

Standards RS232 and EIA485 serve as a communication link between a PC and an external electronic device. RS232 serves to connect one PC with one device, EIA485 can connect up to 30 devices, by using repeaters this number can be further increased.

8.13.1 **Set HtMonit includes interface and software**

Set includes a connector for one of these interfaces situated on accessible place on the furnace, the furnace cable and PC software and equipment - HtMonit software.

8.13.2 **Interface RS232 or EIA485**

Includes a connector situated on an accessible place on the furnace.

8.13.3 **Gas analyzer METREX**

Serves to monitor the dangerous concentration of vapors during drying, its output is connected to an automatic ventilation flap or other elements to ensure the safeness (exhaust fan, siren, etc.).

LAC, s.r.o.
+420 547 230 016
info@lac.cz
www.lac.cz

Company's registered office:
Topolová 933, 667 01 Židlochovice
Czech Republic
IČO: 46903470, DIČ: CZ46903470

Production plant Furnaces and Dryers
Topolová 933, 667 01 Židlochovice
Production plant Refractory Castable Shapes
Drnholecká 522, 671 67 Hrušovany nad Jevišovkou

Index změny	Změnu/revizi provedl	Popis změny/revize a č. změněných kapitol/listů	Datum, podpis	Změnu schválil
1	Herůfek	Založení oficiálního dokumentu; rozšíření a revize původního popisu standardního vybavení a příslušenství za příplatek	26. 2. 2013	Holuša
2	Herůfek	Změna v částech 4.7 Odtahový ventilátor a 4.8 Přetlakové chlazení. Přidán popis.	8. 10. 2013	Diblík
3	Horáková	Vložen odstavec 4.7 Neřízené nucené chlazení , úprava bodu 4.8 25.5.2015	16.7.2015	Diblík
4	Horáková	Vložen odstavec 6.5 Vývěva pro PKR, PKRC, SRC Vložen odstavec 6.6 Přetlakový ventil Vložen odstavec 6.7 Systém hlídání optimálního tlaku v retortě	2.11.2015	Zouhar

LAC, s.r.o.
+420 547 230 016
info@lac.cz
www.lac.cz

Company's registered office:
Topolová 933, 667 01 Židlochovice
Czech Republic
IČO: 46903470, DIČ: CZ46903470

Production plant Furnaces and Dryers
Topolová 933, 667 01 Židlochovice
Production plant Refractory Castable Shapes
Drnholecká 522, 671 67 Hrušovany nad Jevišovkou